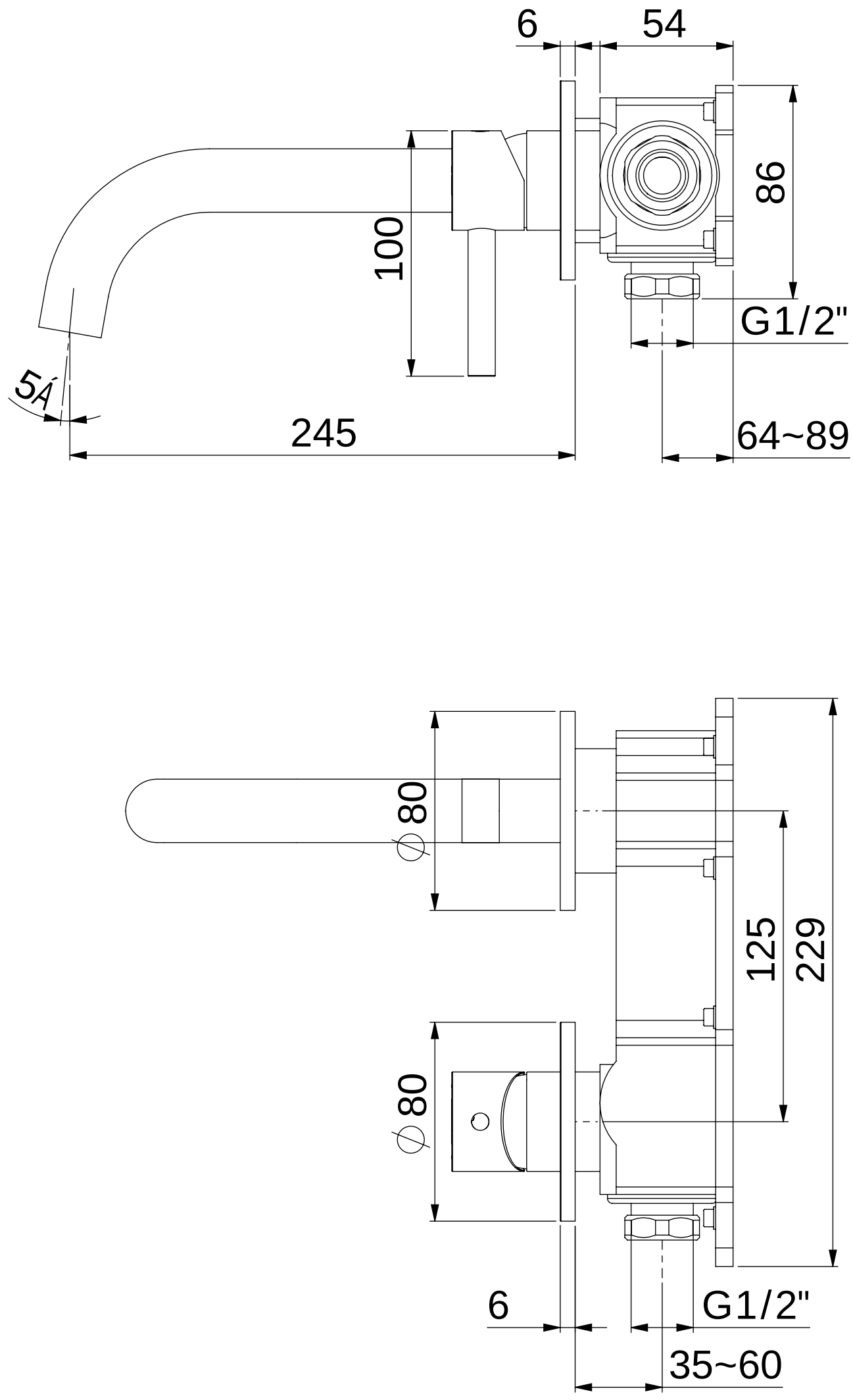

100 1824 3

STEINBERG