GEBERIT

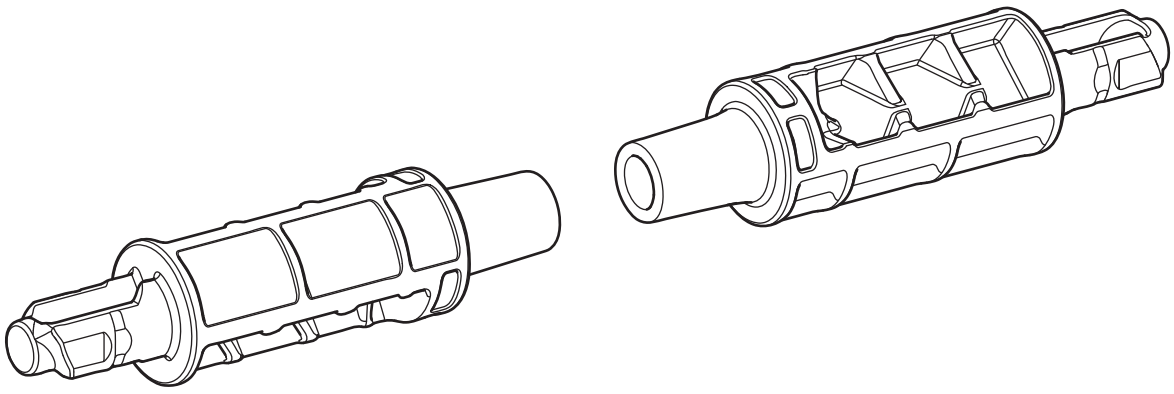

INSTALLATION MANUAL

MONTAGEANLEITUNG
INSTRUCTIONS DE MONTAGE
ISTRUZIONI PER IL MONTAGGIO

KNOW HOW INSTALLED

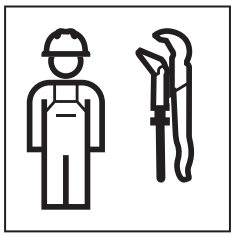

972.680.00.0(01)

1

1

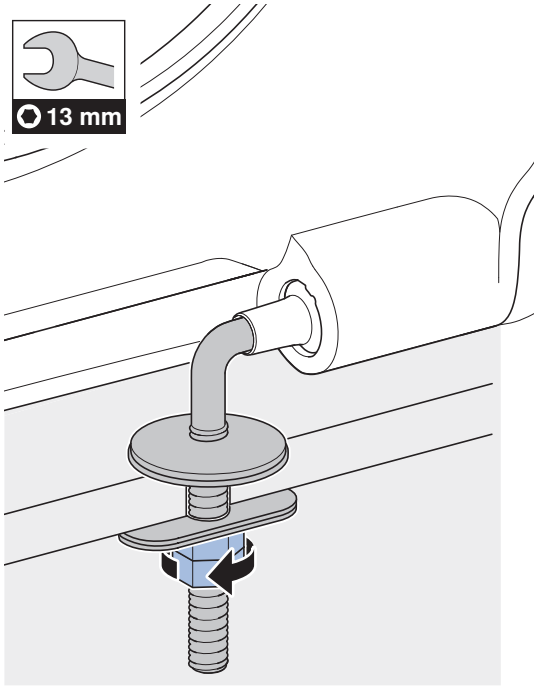

2

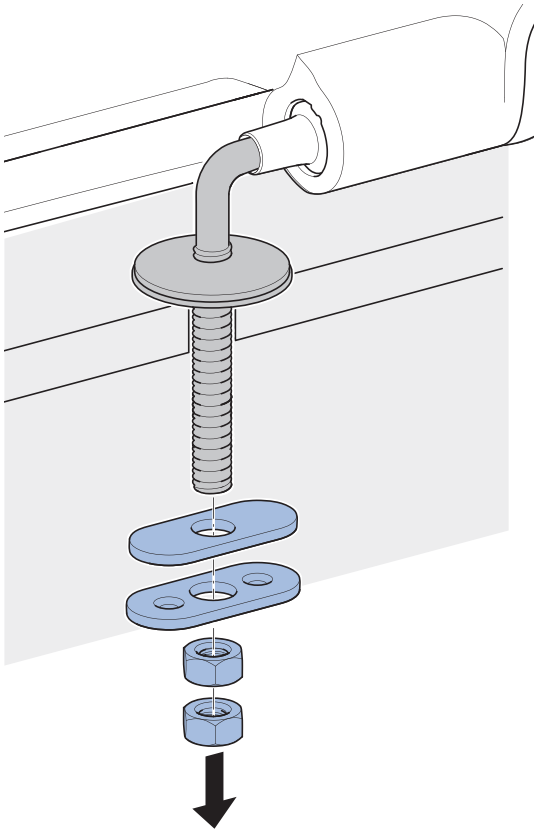

3

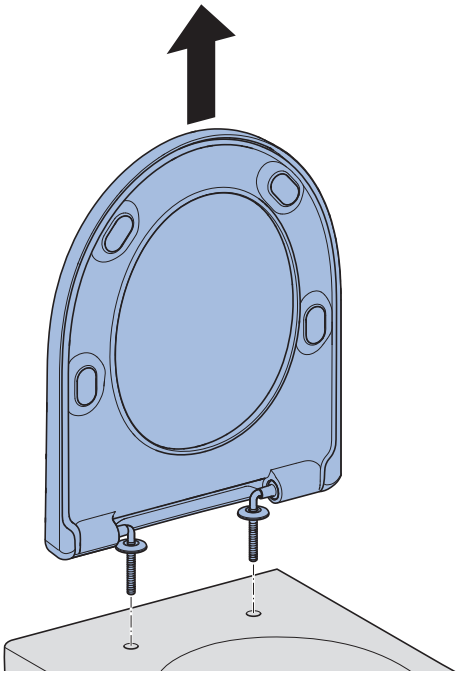

4

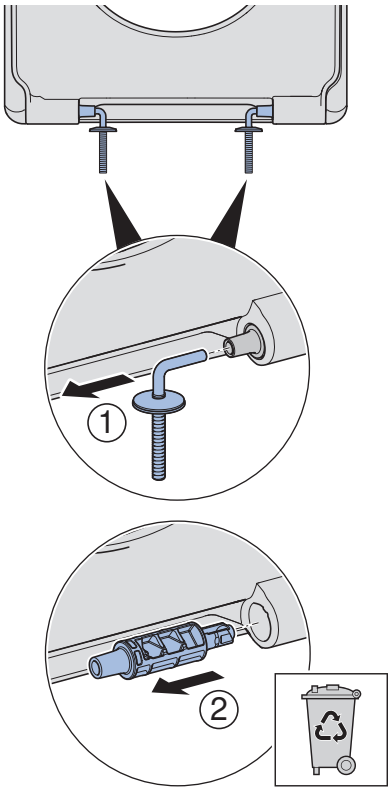

450360110891155531 © 09-2026
972.680.00.0(01)

2

1

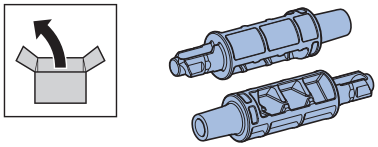

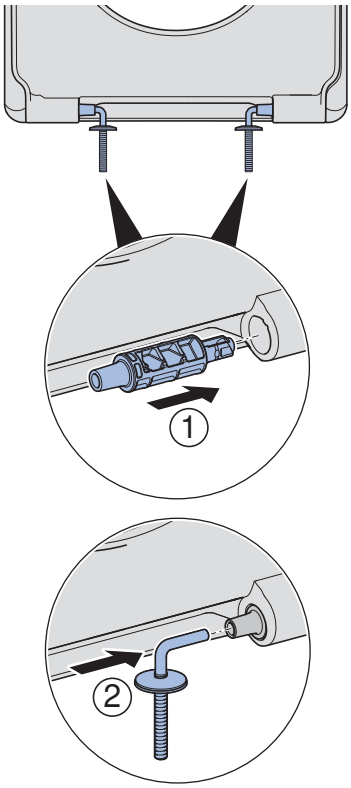

2

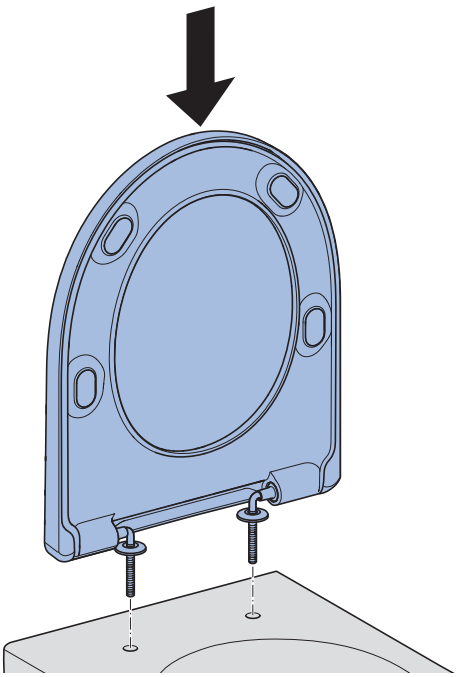

3

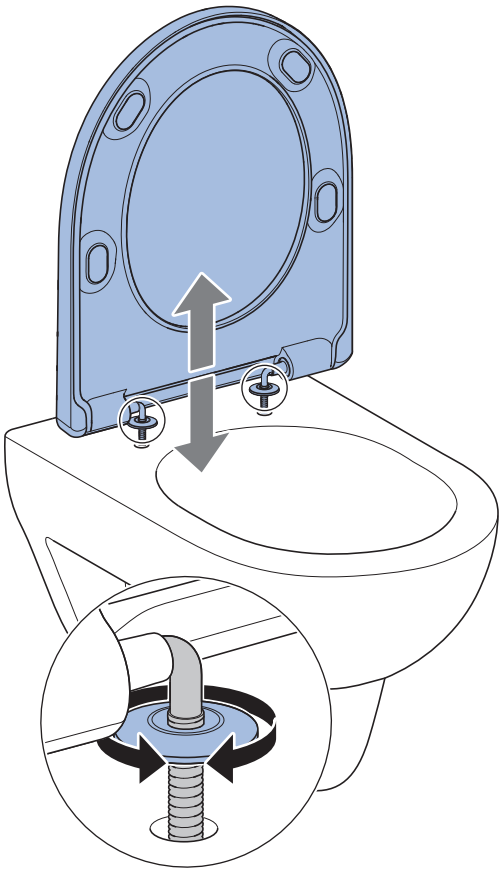

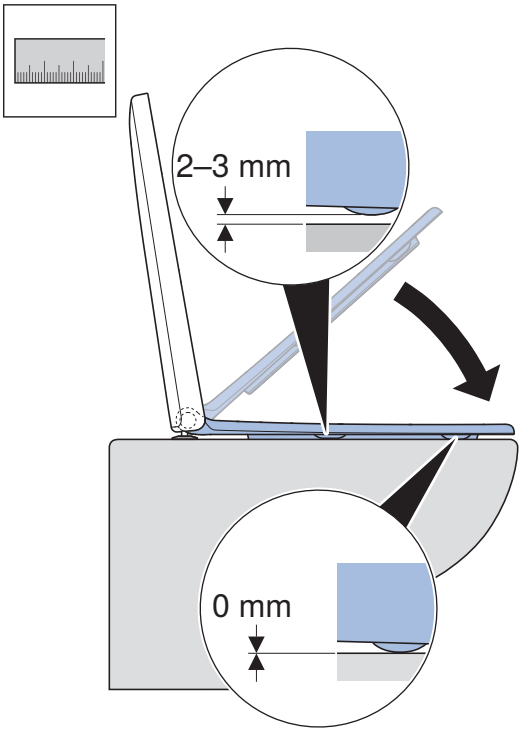

4

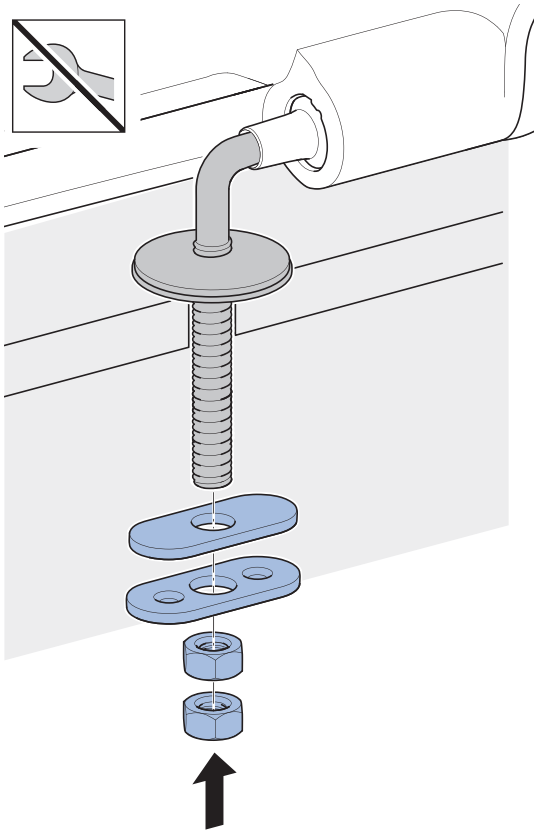

5

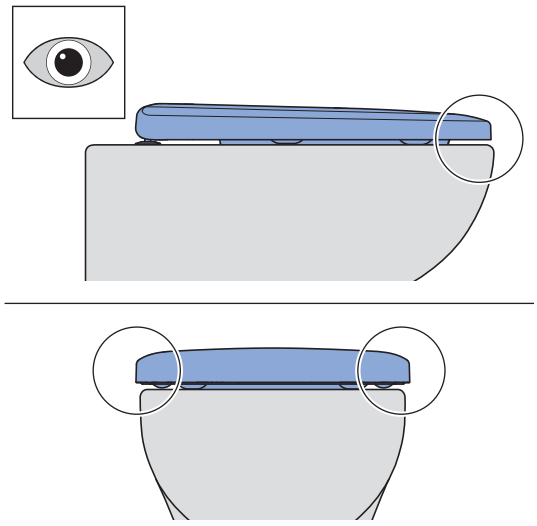

6

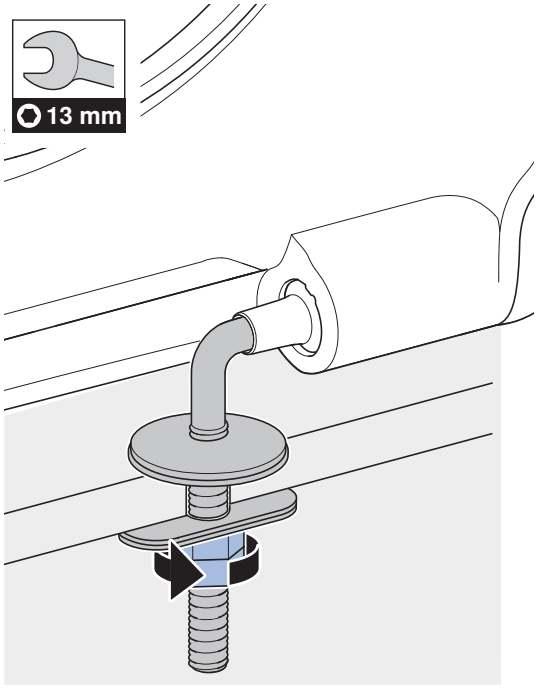

Geberit International AG
Schachenstrasse 77, CH-8645 Jona
documentation@geberit.com
www.geberit.com

450360110891155531 © 09-2026
972.680.00.0(01)