DESIGN + ENGINEERING
GROHE GERMANY

99.1667.031/ÄM 250892/04.21

www.grohe.com

Pure Freude an Wasser
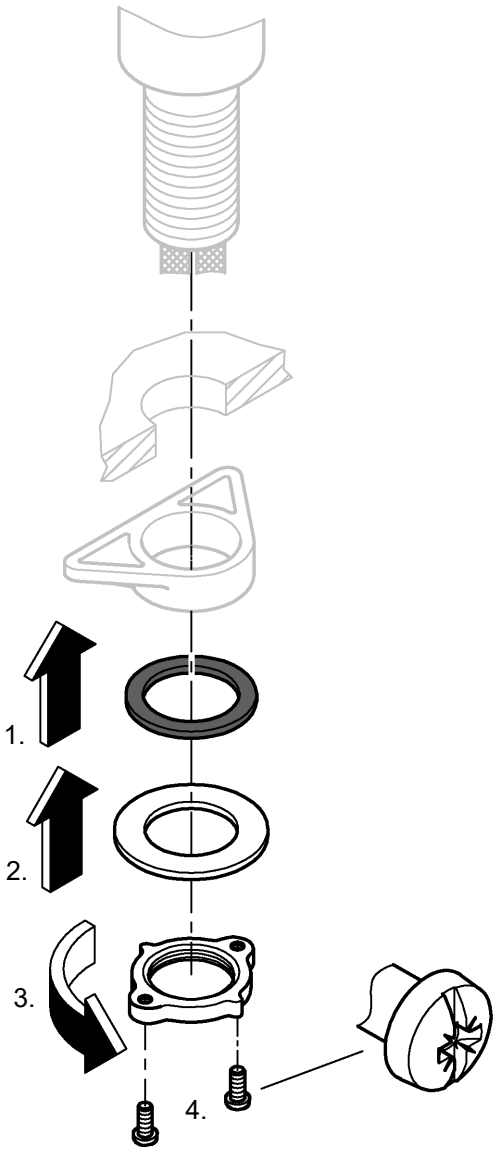
GROHE